Generator Condition Monitor

Corrective action prompted by early warning of generator overheating can mean the difference between a brief shutdown for minor repairs and a major overhaul involving weeks or even months of costly downtime. E/One pioneered the development of the Generator Condition Monitor (GCM) and in more than 1,500 applications worldwide, operators have the opportunity of taking corrective action if and when a critical situation occurs.

SPECIFICATIONS

MEASUREMENT CHARACTERISTICS

Technology Principle	Ionization Chamber
Flow Rate	Adjusted by internal valve
Differential Pressure	4" to 5" (102 mm to 127 mm) minimum
Bar Graph Readout	
Normal Operation	80% of scale, typical
Alarm Condition	50% of scale, typical
Flow	1.5

ELECTRICAL CHARACTERISTICS

Input Voltage	115/230 VAC
Input Frequency	50/60 Hz
Input Power	100 Watts
Output Signal	4-20 mA current output, self-powered (0 to 100%)
Flow output signal	4-20 mA current output, self-powered (0 to 3")
Output, Relays	3A @ 250 VAC
Alarm, NO and NC	3A @ 30 VDC resistive
Warning, NO and NC	100 mA @ 125 VDC resistive
Trouble, NO and NC	
Area Classification	Class I, Zone 2, Group IIB + H2

MECHANICAL CHARACTERISTICS

Overall Dimensions	21.8"W x 23.6"D x 30.8"H
Weight	240 lbs.(110 Kg)
Temperature	32-149 F (0-65 C)
Relative Humidity	0-95%
Gas Pressure	100 psi maximum
Gas Connections	150 lbs., 1/2" pipe flanges, standard

Building on more than three decades of proven field experience, and incorporating international requirements for hazardous area locations, the Generator Condition Monitor—Explosion-Proof Design (GCM-X) assures a new level in performance, reliability, and safety.

HOW THE GCM-X WORKS.

High concentrations of submicron particles (pyrolytic products) are produced whenever any materials within the generator are heated sufficiently to produce thermal decomposition, due to arcing or other failure modes. These "hotspots" can lead to catastrophic failure if not detected in a timely manner. When they are present in hydrogen, pyrolytic products are quickly detected by the sensitive ion chamber of the GCM-X. In fact, the GCM-X offers a wider range of coverage and warns of impending failure faster and more reliably than temperature sensors such as RTDs or thermocouples, which need to be physically near the hotspot, or wait until overheating progresses to the point that the temperature near the RTD or thermocouple rises sufficiently for the sensor to detect it. This results in a significantly larger "fault," possibly a catastrophic one.

Upon the detection of hotspots, the GCM-X microprocessor initiates and monitors an automatic alarm sequence, activating the solenoid valve in the filter/solenoid valve assembly. Hydrogen passes through the filter, which removes the submicron particles allowing the ion chamber detector to return to its normal level, confirming the presence of the pyrolytic particles and the existence of overheating. Once the alarm is confirmed, a verified alarm indication is given; alarm contacts are switched; and a fixed amount of the hydrogen flow automatically passes through the sampling system. Particles are then collected for laboratory analysis to determine their source.

FEATURES AND BENEFITS

- Microprocessor-based with self-diagnostics
- Flameproof, intrinsically safe design
- Differential pressure transmitter for stable flow control
- Dual bar graphs for flow and output
- Separate warning and trouble indicators
- Automatic alarm verification
- Optional remote control/display and communication
- Easy installation
- Maintenance-free operation

e one UTILITY SYSTEMS Generating Solutions™

OUTLINE

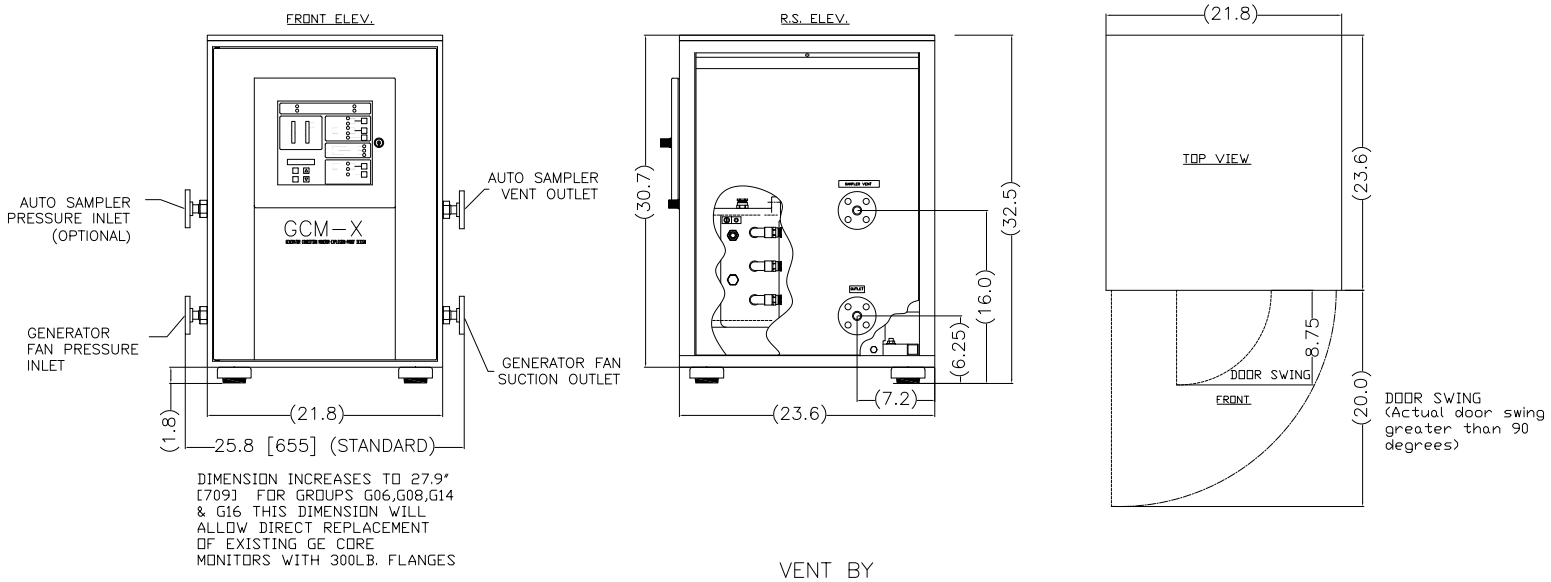

P & ID

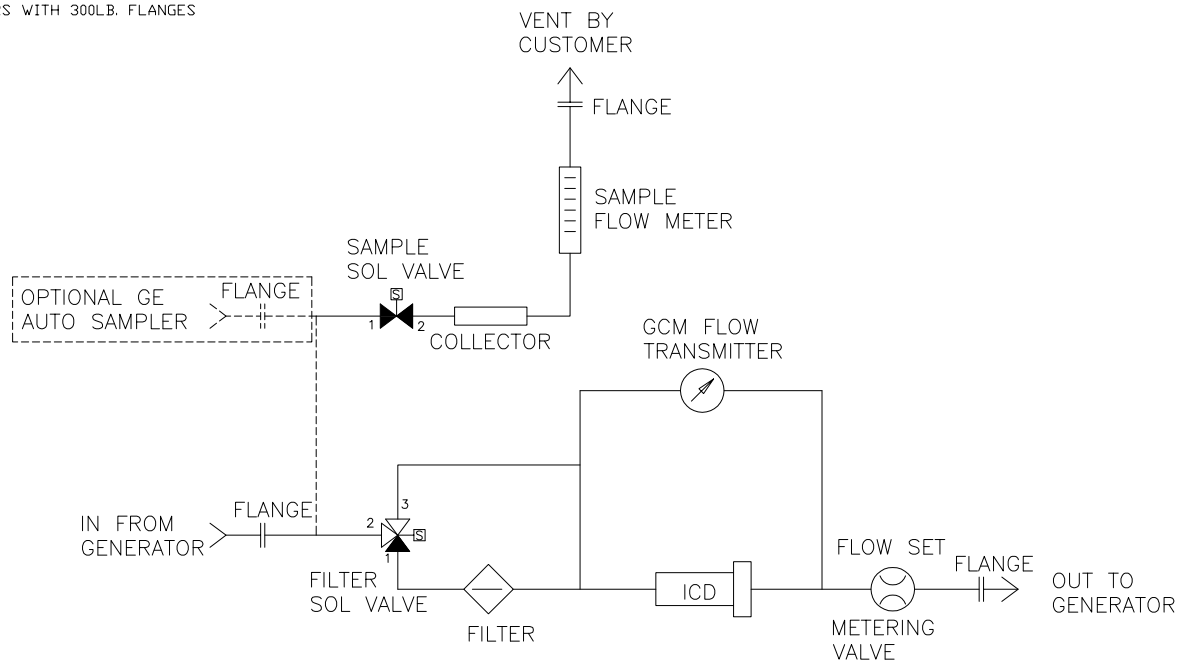

CUSTOMER CONNECTIONS

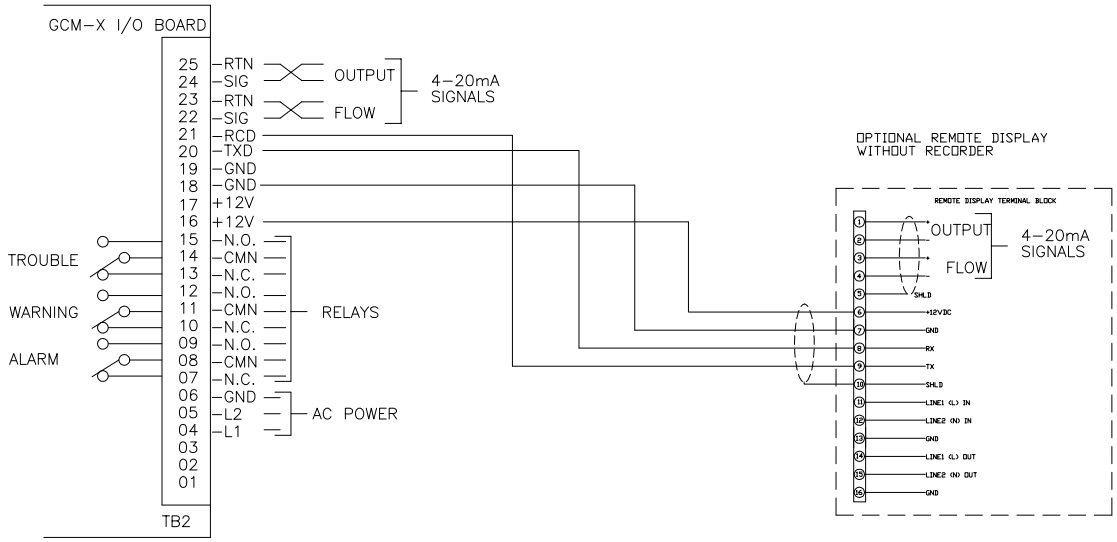

eone UTILITY SYSTEMS Generating Solutions™

Environment One Corporation
Utility Systems
2773 Balltown Road
Niskayuna, NY 12309 USA
Voice: 518.346.6161
Fax: 518.346.4382
www.eone.com/solutions

A PCC Company / LM000407